Washroom® Accessories INC.
Architectural & Janitorial Washroom Accessories

GRAB BARS
EXPOSED FLANGE

JOB #:
ITEM #:
QTY:

MOUNTING	HANDING	TYPE	SIZE A, B, C	OTHER

HANDING
☐ RH (Right Hand)
☐ LH (Left Hand)

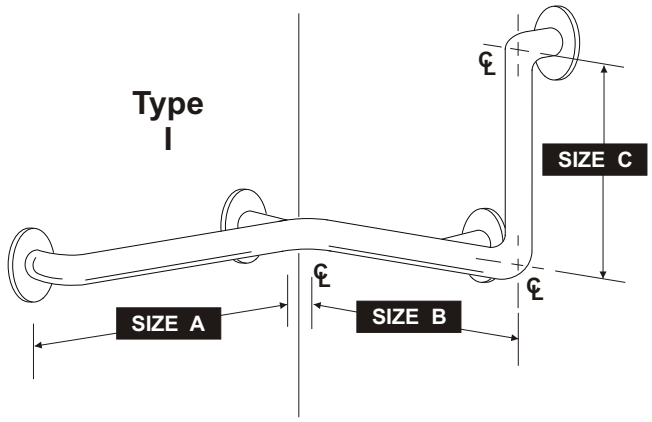

(Right Hand Shown)

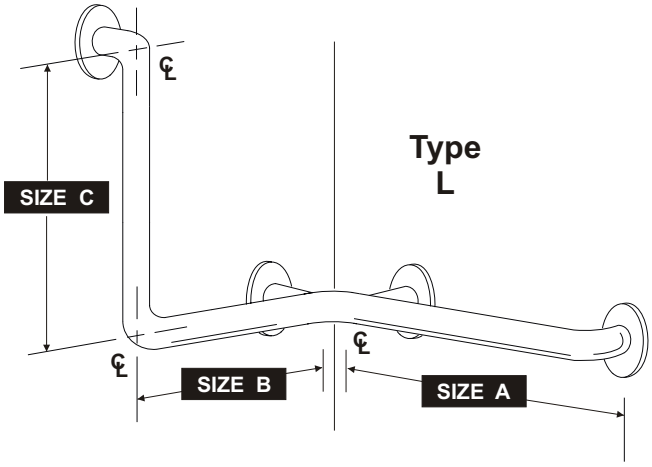

(Left Hand Shown)

SPECIFICATIONS:

Tubing: Fabricated of type 304 #18 ga stainless steel with a #4 satin finish. Available in 1", 1 1/4" and 1 1/2" outside diameter. All bends are formed by an automatic mandrel bending process. **All bars maintain a constant 1 1/2" offset.**
Flanges: Flanges are fabricated of 3" diameter, type 304 #11 ga stainless steel with #4 satin finish to match tubing. Flanges are heliarc welded to bar to form a one piece construction. Each flange has three (3) countersunk mounting points (1/4" dia.)
Strength: Bars that provide a 1 ½" offset can support loads in excess of 900 lbs when properly installed. Other configurations can support loads in excess of 250 lbs when properly installed. Grab bars must be installed properly to support the loads intended.
Peened Surface: ***(Safety Grip, Non-Slip)*** This area of the bar is only found on the gripping surface area.

Unit	Bar Diameter		Surface
UG110	1"	(25mm)	Satin Finish
UG120	1 1/4"	(32mm)	Satin Finish
UG130	1 1/2"	(38mm)	Satin Finish
UG110X	1"	(25mm)	Peened Finish
UG120X	1 1/4"	(32mm)	Peened Finish
UG130X	1 1/2"	(38mm)	Peened Finish

**When measuring and ordering grab bars, remember bars are sized centerline to centerline.*
**Grab Bars comply with ADA Code 4.26.2*
**Non-chloric and non-abrasive cleaners should be used to clean surface of bars and flanges.*

INSTALLATION:

Before installing grab bars, verify with all state and local codes for requirements on bar diameter and type finish. Recommended mounting heights for grab bars are 33" - 36" centerline above finished floor. All mounting of grab bars when possible should be in wall mounting back plates. Find centerline mounting points and place bar on line making sure to be on center. Transfer mounting points (3 per flange) to wall. Drill pilot holes and secure bar with proper anchors per application.

FLANGE DIAGRAM

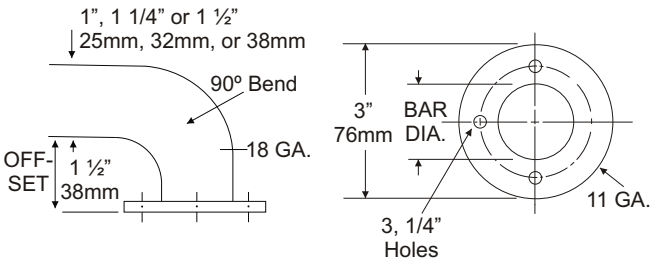

APPLICATION:

To provide a stainless steel exposed mount grab bar that is available in standard and custom configuration that comply's with ADA Code when installed properly.

Form: GBEXP_IL/2000

This information is subject to change without formal notice. If you need additional help, A&J Washroom accessories, Inc. has a technical support staff that is ready to assist you at Fax (845) 562-3391, email: quoting@ajwashroom.com or visit our web at http://www.ajwashroom.com

Copyright 2000 A&J Washroom Accessories, Inc.

Revised Date: 09/01/2000