A&J Washroom Accessories

US7128B
SECURITY MIRROR

Job #:

Item #:

Quantity:

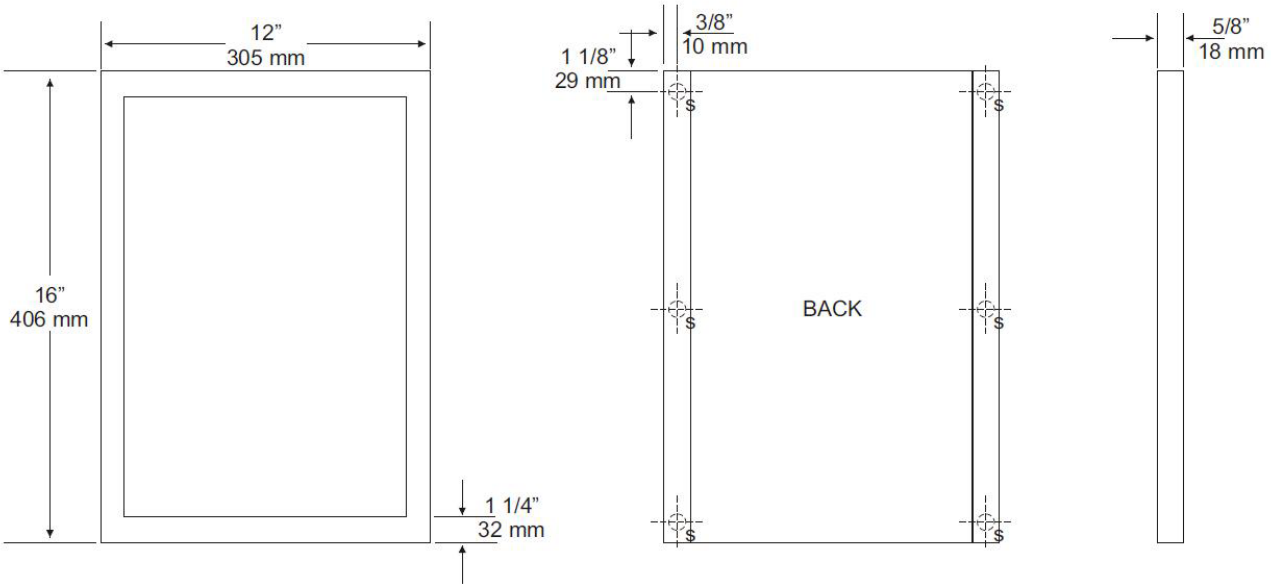

Frame: Fabricated of type 304 #14 gauge stainless steel with a #4 satin finish. (1 1/4” x 5/8”) Welded construction with polished edges without miters.

Mirror: Type 430 bright polished stainless steel.

Back: Stainless back pan with weld nuts to receive 1/4-20 threaded studs. (6)

***Threaded studs are not provided by manufacturer.**

US7128B: Security Rear Mounted Angle Frame Mirror.

Overall Size: 16”W x 24”H

406mm x 610mm

Overall Size: 12”W x 16”H

305mm x 405mm

Standard size is 12”W x 16”H. Other sizes are available on request.

Unit Sizes (W x H) Qty

_____ _____ x _____ _____

_____ _____ x _____ _____

_____ _____ x _____ _____

Coordinate mirror installation with architect and contractor to avoid pipes, vents, wires, etc.... in wall. Unit is anchored through wall or partition using six (6) on standard sizes. 1/4”-20 threaded rods, washers and nuts (Not supplied) to the threaded weld nuts on frame. Rod length must extend far enough through back of wall to secure nut and washer. Secure mirror with proper fasteners per application. Fasteners are not supplied by manufacturer.

***Note**: The center weld nut on the flange will always be the center dimension of the height, standard or special size mirrors

NOTES