Architectural Products

US80

Security Recessed Soap Dish

Revision 05/11

JOB #:

ITEM #:

QUANTITY:

MOUNTING	HANDING	TYPE	SIZE	OTHER

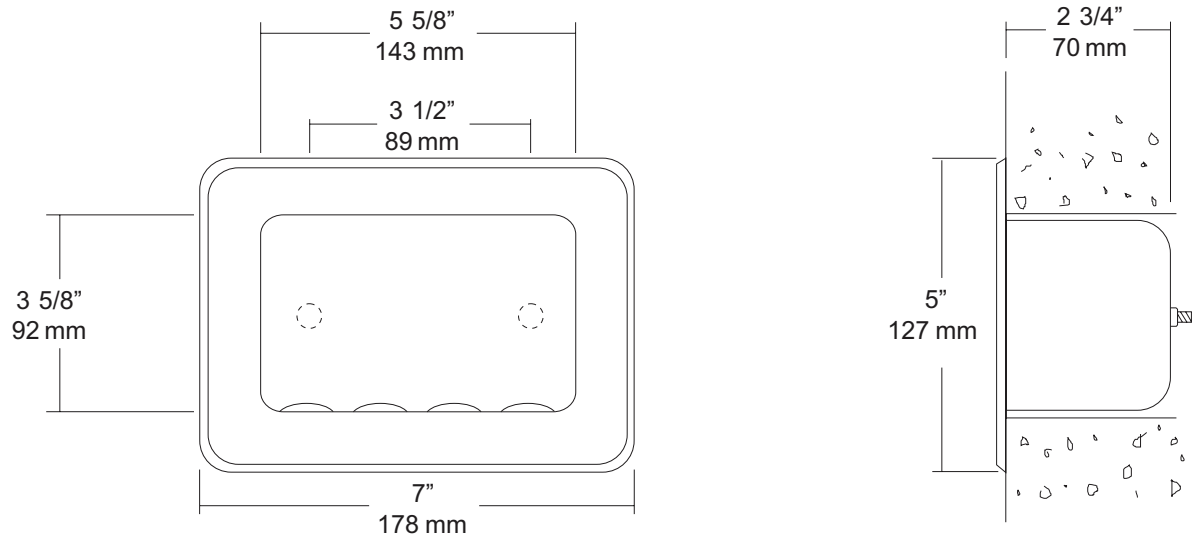

SPECIFICATIONS

Soap Dish: Fabricated of #16 gauge stainless steel with a #4 satin finish on all exposed surfaces. Unit is drawn one-piece seamless construction. Outer edge of holder is beveled to provide a snug fit against wall surface. Back of unit has welded anchor nuts to receive threaded securing rods. Bottom of soap dish (internal) has raised areas to allow air flow to prevent soap from sticking to holder.

Overall Size: 7”W x 5”H x 2 3/4”D

178mm x 127mm x 70mm

Wall Opening: 5 7/8”W x 3 7/8”H x 2 3/4”D

149mm x 98mm x 70mm

INSTALLATION

Coordinate installation with contractor and architect to avoid interference with pipes, vents, etc. In wall. Provide a rough wall opening 5 7/8”W x 3 7/8”H x 2 3/4”D. Measure the wall depth and cut the rods to required length. Insert rods though back plate and secure with washers and nuts. (Washers and nuts not included)

NOTES

.

This information is subject to change without formal notice. If you need additional help, AJW has a technical support staff that is ready to assist you by phone: (845) 562-3332, fax: (845)562-3391, email: engineering@ajw.com or visit our website: www.ajw.com. Copyright © 2013 AJW Architectural Products