Architectural Products

UX1B

Flange & Shower Rod

Revision 03/11

JOB #:

ITEM #:

QUANTITY:

MOUNTING	HANDING	TYPE	SIZE	OTHER

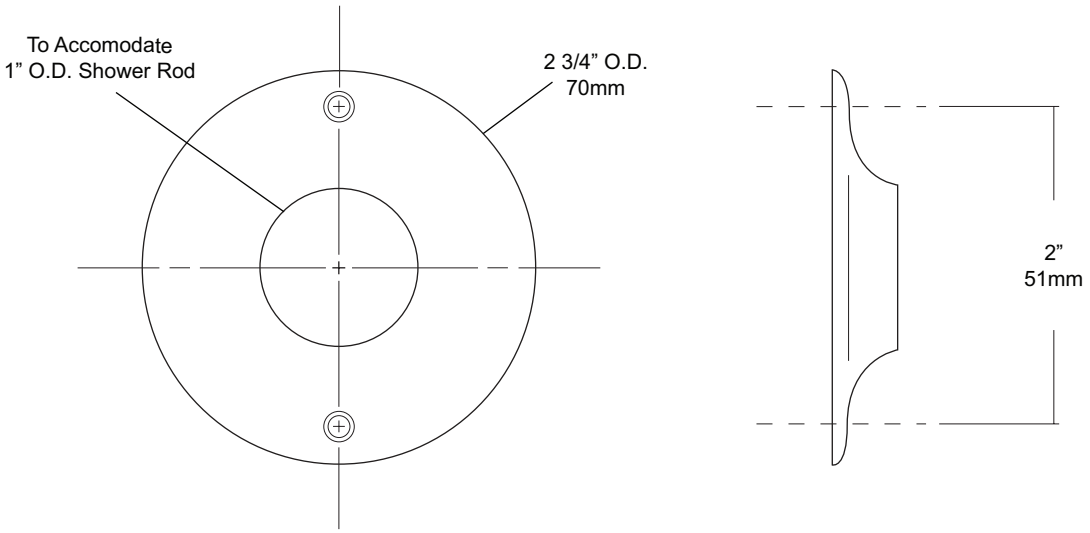

SPECIFICATIONS

Exposed Cover: Fabricated of #22 gauge stainless steel with a #4 satin finish. Cover has 2 (2) exposed mounting points.

Shower Rod: Fabricated of 18 gauge stainless steel with a #4 satin finish.

UX1: 1” outside diameter

INSTALLATION

Provide an area on wall surface at desired or specified location. Hold flange to wall surface and transfer mounting points. Drill pilot holes. Place flanges on the ends of the rods. Secure flanges to wall surface with proper fasteners per application.

NOTES

.

This information is subject to change without formal notice. If you need additional help, AJW has a technical support staff that is ready to assist you by phone: (845) 562-3332, fax: (845)562-3391, email: engineering@ajw.com or visit our website: www.ajw.com. Copyright © 2013 AJW Architectural Products